COMMERCIAL DATA SHEET
Quadra Compact XL & Red/Blue Levers

Billi Quadra Compact with XL Levered Dispenser & Red/Blue Levers

The Quadra Compact Boiling and Chilled drinking water system is a water cooled, intermediate capacity, commercial drinking water solution.

Our Quadra boiling and chilled range incorporates Billi's core design principles - standing out for its use of innovative energy reclaim technology. Not only does the system save space and energy, but it also eliminates the need for joinery ventilation to transfer waste heat. This technology is backed by the Global Green Tag accreditation.

Steamlined and elegant, the XL levered dispenser with the addition of our Red/Blue levers offers boiling and chilled output delivered safely by operating the position-sensitive levers. The inclusion of red and blue levers provides accessibility for individuals with vision impairments, and meets contrast criteria to comply with the Equality Act 2010.

BOILING CHILLED

Up to 20

XL Levered Dispenser & Red/Blue Levers



Quadra Under-Bench Unit



Features

- SPACE SAVING DESIGN
- SAFE TO OPERATE
- ENERGY EFFICIENT
- HEAT EXCHANGE TECHNOLOGY
- WATER COOLED TECHNOLOGY
- NO CUPBOARD VENTILATION REQUIRED
- EQUALITY ACT COMPLIANT
- GREENTAG CERTIFIED
- EASY INSTALLATION

PRODUCT SPECIFICATIONS

Water type	Product code	Model name	Dispenser	Suggested no. of people	Boiling water delivery (cups per hour)*	Chilled water delivery (cups per hour)	Power supply (amps)
BOILING CHILLED	904010LRBUK	Quadra Compact	XL Levered & Red/Blue Levers	Up to 20	100	150	13

* Based on a set volume of water being drawn every 30 seconds at an inlet temperature of average temperature 21°C. Each cup is equivalent to 170ml. Usage patterns and draw-off methods can impact recovery.

Accessories

992803 - 120mm Riser & Font



996300 - Braille Decals



990720 - Tubing Extension Kit for X series dual temp dispensers 2mtrs

Finishes

Standard Finish

CH - Chrome

As a fit for purpose solution to comply with the Equality Act 2010, the specification code is 904010LRBUK

TECHNICAL DRAWING & INSTALLATION REQUIREMENTS

PRODUCT DIMENSIONS

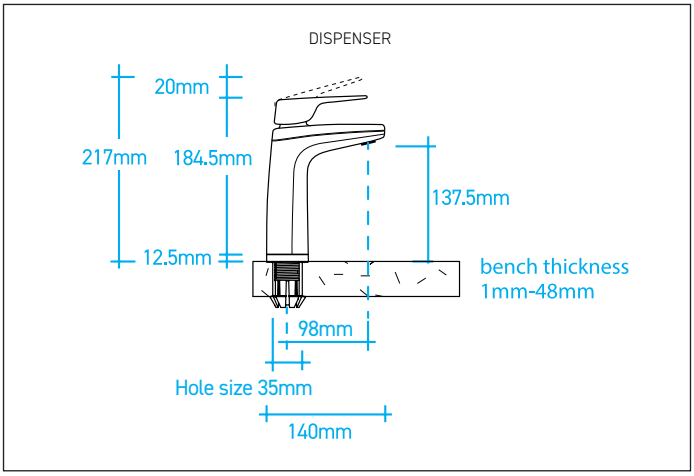

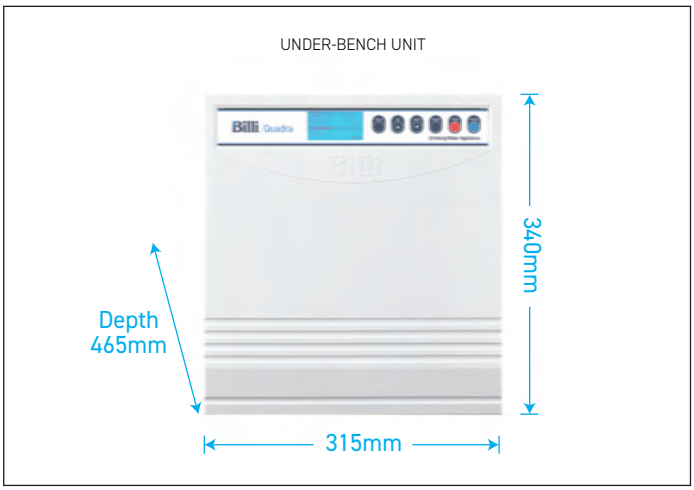

PREFERRED INSTALLATION LAYOUT

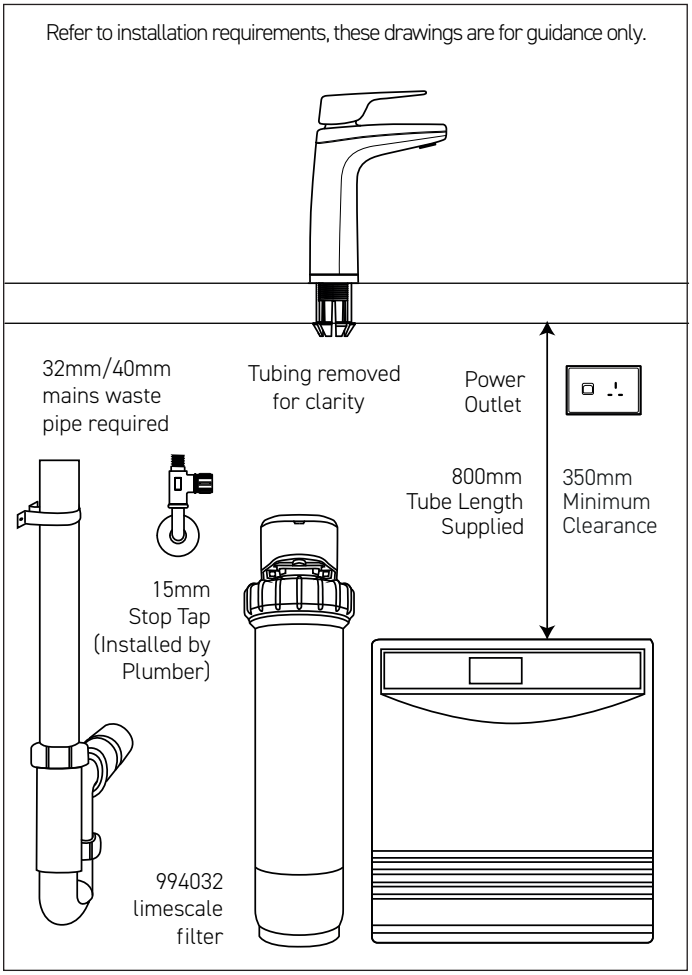

WATER SUPPLY
An accessible drinking water supply from a 15mm pipe with a minimum pressure of 2.5bar static and 6 litres a minute flow should be located in the base unit of the installation location.

POWER SUPPLY
A 13amp single switched socket must be positioned at a high level and accessible within the cupboard. The unit comes with a 1 meter flex cord and plug.

WASTE REQUIREMENTS
A 32mm/40mm mains waste pipe is required within the base unit. This pipe should include a trap or u-bend to prevent any unpleasant odours. If there is a spigot waste connection, two spigots are required to connect to the waste and condenser line.

WARRANTY
The Billi Quadra Range is covered by a comprehensive 2 year warranty on all parts and labour.

FILTRATION
Billi's range of premium filters utilise BWT's unique Fibron X technology which provide superior taste, water quality, consistent filter life and peace of mind when it comes to hygiene.

Supplied: 994051 (5 micron)
On request: 994032 (recommended iX02 limescale filter)

CERTIFICATIONS & COMPLIANCE*
Every Billi drinking water appliance is manufactured under a certified quality control system. All Billi commercial range models have been tested and comply with all required standards including: ISO 9001:2015, QEC 11627; WRAS certified; WELL Cornerstone Member; BREAMM compliant; LEED compliant; Equality Act Compliant; Global Greentag Certified.

** Drawings are for guidance during specification, refer to Installation requirements for final install. All efforts are made to ensure Certifications & Compliance claims are current, however this is subject to change without notice.*

Billi™

WRAS APPROVED PRODUCT

Billi UK Limited
University Of Wolverhampton Science Park,
Technology Centre, Glaisher Drive,
Wolverhampton, WV10 9RU

P 020 7456 6789
E marketing@billi-uk.com
W www.billi-uk.com

visit us at

Billi™ is a trademark of Billi Australia Pty Ltd. All rights reserved. © Copyright protected. As Billi Australia Pty Ltd has a policy of continual improvement, all details are subject to change without notice. All goods are sold subject to our published terms and conditions.