COMMERCIAL DATA SHEET
Alpine 060 Round Slimline

Billi Alpine 060 with Round Slimline Dispenser

Enjoy refreshing chilled and a continuous supply of filtered water. Billi's Alpine 060 offers a premium filtered drinking water experience.

Even after the chilled tank reserve has been depleted, the Alpine 060 is capable of dispensing a continuous stream of cool filtered water supplied from the round slimline dispenser with single pin lever operation.

CHILLED

Up to 12

Round Slimline Dispenser



Alpine Under-Bench Unit



Features

- SPACE SAVING DESIGN
- ENERGY EFFICIENT
- NO CUPBOARD VENTILATION REQUIRED
- ADJUSTABLE CHILLED TEMPERATURE
- WATER COOLED TECHNOLOGY
- CHOICE OF DISPENSER DESIGNS

PRODUCT SPECIFICATIONS

Water type	Product code	Model name	Dispenser	Suggested no. of people	Chilled water delivery (cups per hour)	Power supply (amps)
CHILLED	932060RUK	Alpine 060	Round Slimline	Up to 12	60	13

Accessories

992810 -Slimline Font

990724 - Tubing Extension Kit for Slimline 2mtrs

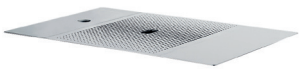

Finishes

Standard Finishes

- CH - Chrome
- BR - Brushed
- MB - Matte Black

Special Order Finishes

- MW - Matte White
- RG - Rose Gold

Add the relevant Finish Code and the Country Identifier (UK) to the Product code to complete your specification eg 932060RMBUK

TECHNICAL DRAWING & INSTALLATION REQUIREMENTS

PRODUCT DIMENSIONS

DISPENSER

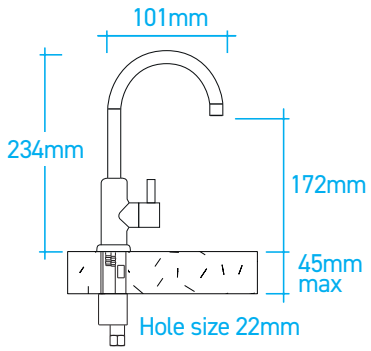

UNDER-BENCH UNIT

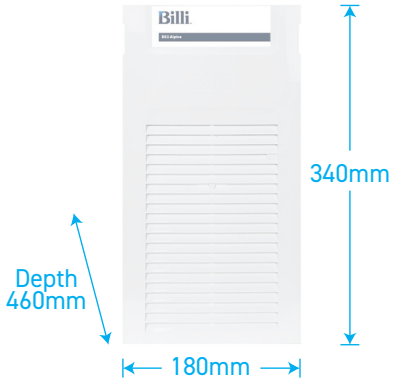

PREFERRED INSTALLATION LAYOUT

Refer to installation requirements, these drawings are for guidance only.

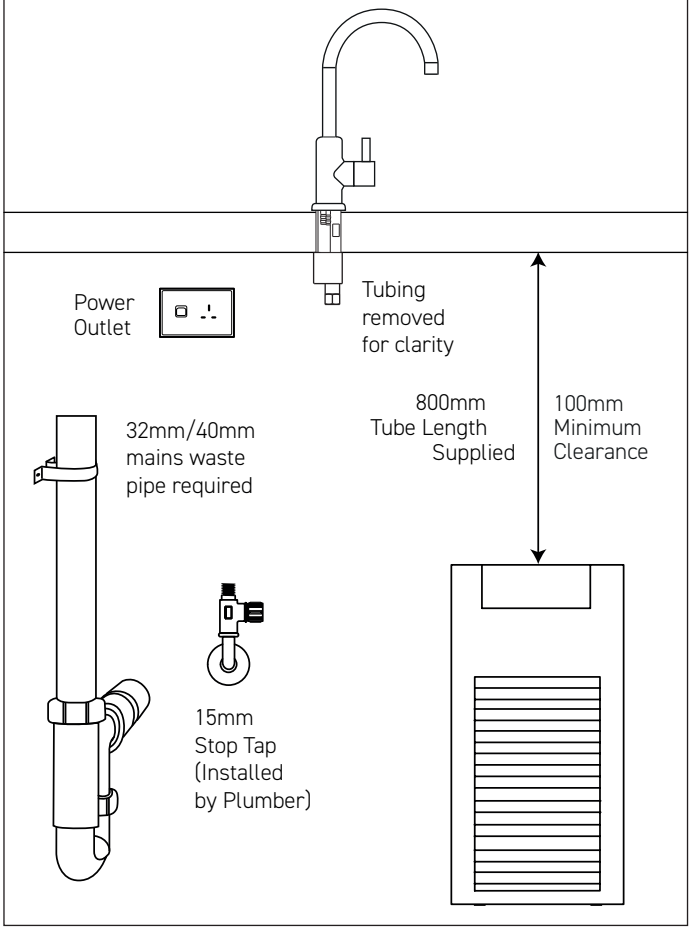

WATER SUPPLY

An accessible drinking water supply from a 15mm pipe with a minimum pressure of 2.5bar static and 6 litres a minute flow should be located in the base unit of the installation location.

POWER SUPPLY

A 13amp single switched socket must be positioned at a high level and accessible within the cupboard. The unit comes with a 1 meter flex cord and plug.

WASTE REQUIREMENTS

A 32mm/40mm mains waste pipe is required within the base unit. This pipe should include a trap or u-bend to prevent any unpleasant odours. If there is a spigot waste connection, two spigots are required to connect to the waste and condenser line.

WARRANTY

The Billi Alpine Range is covered by a comprehensive 2 year warranty on all parts and labour.

FILTRATION

Billi's range of premium filters utilise BWT's unique Fibron X technology which provide superior taste, water quality, consistent filter life and peace of mind on the topic of hygiene.

Supplied: 994051 (5 micron).

CERTIFICATIONS & COMPLIANCE*

Every Billi drinking water appliance is manufactured under a certified quality control system. All Billi commercial range models have been tested and comply with all required standards including: ISO 9001:2015, QEC 11627; WRAS certified; WELL Cornerstone Member; BREAMM compliant; LEED compliant.

** Drawings are for guidance during specification, refer to Installation requirements for final install. All efforts are made to ensure Certifications & Compliance claims are current, however this is subject to change without notice.*

Billi™

WRAS APPROVED PRODUCT

Quality ISO 9001

NBS

Billi UK Limited
University Of Wolverhampton Science Park,
Technology Centre, Glaisher Drive,
Wolverhampton, WV10 9RU

P 020 7456 6789
E marketing@billi-uk.com
W www.billi-uk.com

visit us at

Billi™ is a trademark of Billi Australia Pty Ltd. All rights reserved. © Copyright protected. As Billi Australia Pty Ltd has a policy of continual improvement, all details are subject to change without notice. All goods are sold subject to our published terms and conditions.