COMMERCIAL DATA SHEET

Quadra Plus 9 XT & Gooseneck

Billi Quadra Plus 9 with XT Touch Dispenser & Gooseneck Mixer

Enjoy all the space saving benefits of Billi's water cooled boiling and chilled Quadra systems PLUS a separate sink mixer to ensure safety and convenience for all users.

BOILING CHILLED PLUS Up to 60

Requiring only cold feed mains supply, the Quadra Plus mixes it's own hot water without the need for any additional under-bench space requirements or boosters.

All our Quadra Plus boiling and chilled range incorporates Billi's core design principles - standing out for its use of innovative energy reclaim technology. Not only does the system save space and energy, but it also eliminates the need for joinery ventilation to transfer waste heat. This technology is backed by the Global Green Tag accreditation.

Supplied standard with our sleek and contemporary touch sensitive XT dispenser and round gooseneck mixer tap.

XT Touch Dispenser



PLUS

Gooseneck Mixer



Quadra Plus Under-Bench Unit



Features

SPACE SAVING DESIGN · SAFE TO OPERATE · ENERGY EFFICIENT · HEAT EXCHANGE TECHNOLOGY · WATER COOLED TECHNOLOGY · NO CUPBOARD VENTILATION REQUIRED · GREENTAG CERTIFIED · EASY INSTALLATION

PRODUCT SPECIFICATIONS

Water type	Product code	Model name	Dispenser	Suggested no. of people	50° hot water capacity litres (initial drawdown)	50° hot water delivery litres per hour	Boiling water delivery (cups per hour)*	Chilled water delivery (cups per hour)	Power supply (amps)
BOILING CHILLED PLUS	904065TGUK	Quadra Plus 9	XT Touch	Up to 60	9	60	180	175	13

* Based on a set volume of water being drawn every 30 seconds at an inlet temperature of average temperature 21°C. Each cup is equivalent to 170ml. Usage patterns and draw-off methods can impact recovery.

Accessories

992803 - 120mm Riser & Font



990714 - Tubing Extension Kit for Plus unit - 1.8mtrs

Finishes

Standard Finishes

CH - Chrome | BR - Brushed | MB - Matte Black

Special Order Finishes

MW - Matte White | RG - Rose Gold

Add the relevant Finish Code and the Country Identifier (UK) to the Product code to complete your specification eg 943060TMBUK

TECHNICAL DRAWINGS

PRODUCT DIMENSIONS

DISPENSER

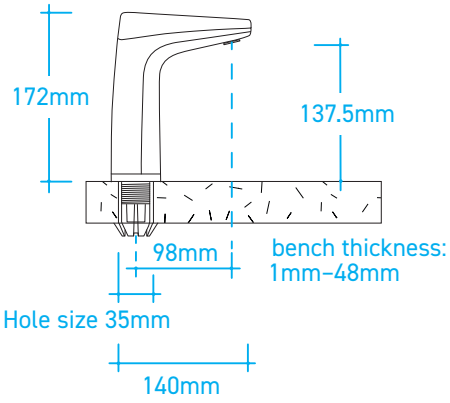

MIXER

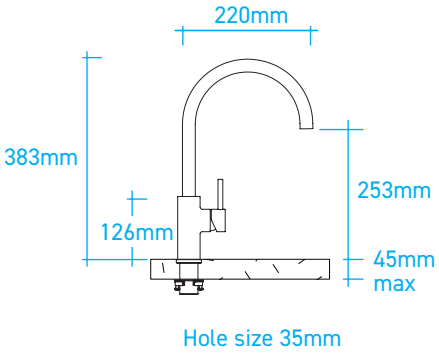

UNDER-BENCH UNIT

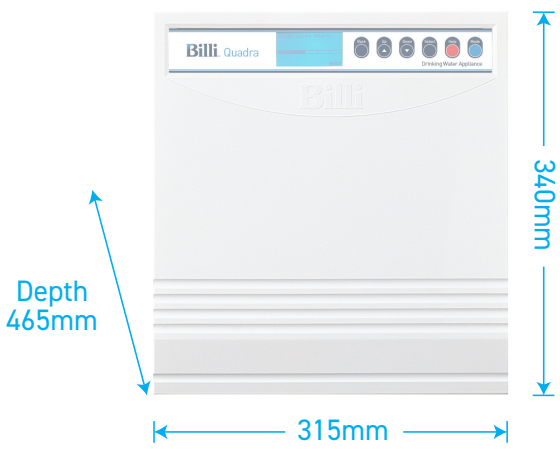

INSTALLATION REQUIREMENTS

PREFERRED INSTALLATION LAYOUT

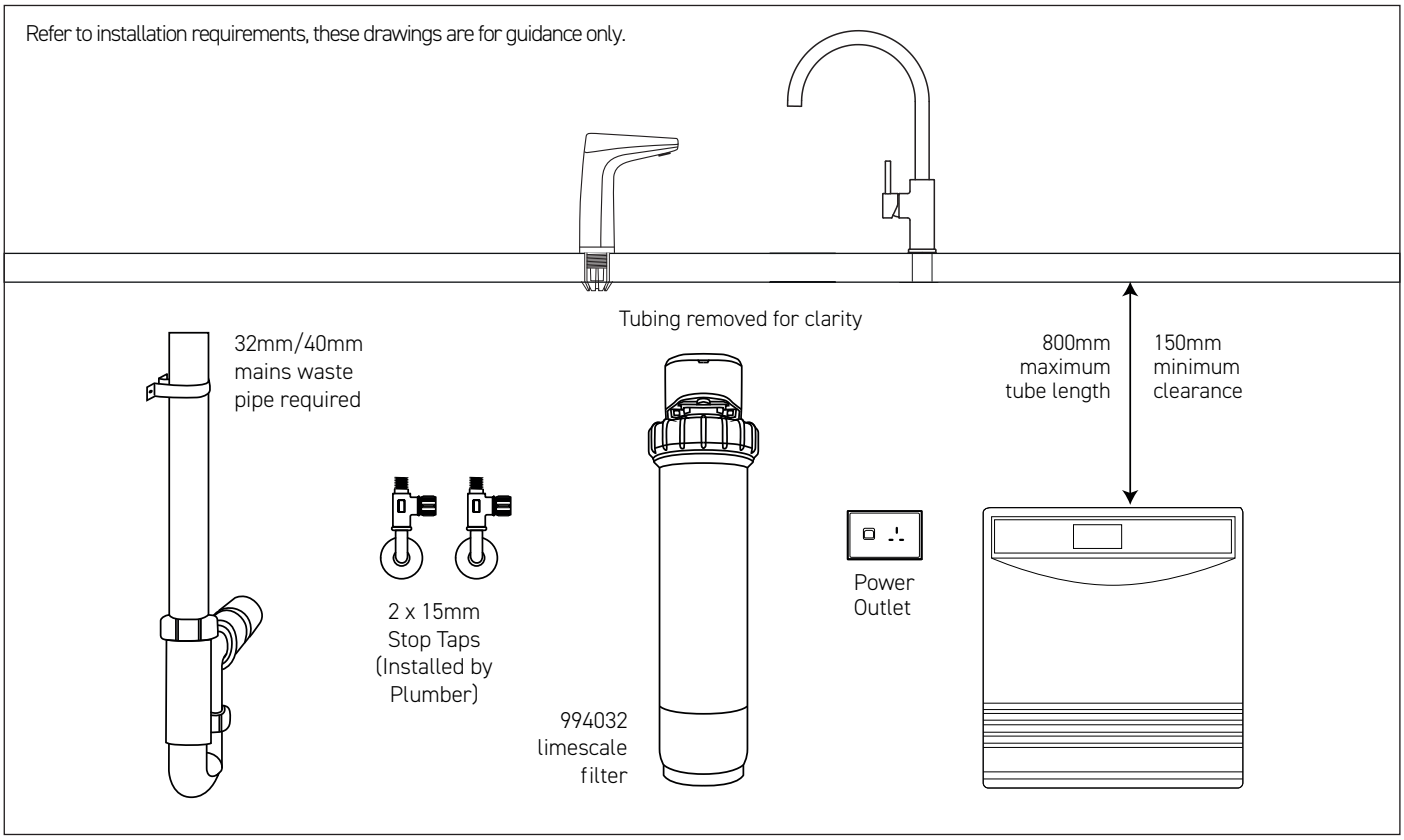

WATER SUPPLY
An accessible drinking water supply from a 15mm pipe with a minimum pressure of 4 bar static and 10 litres a minute flow should be located in the base unit of the installation location.

POWER SUPPLY
A 13amp single switched socket must be positioned at a high level and accessible within the cupboard. The unit comes with a 1 meter flex cord and plug.

WASTE REQUIREMENTS
A 32mm/40mm mains waste pipe is required within the base unit. This pipe should include a trap or u-bend to prevent any unpleasant odours. If there is a spigot waste connection, two spigots are required to connect to the waste and condenser line.

WARRANTY
The Billi Quadra Plus Range is covered by a comprehensive 2 year warranty on all parts and labour.

FILTRATION
Billi's range of premium filters utilise BWT's unique Fibron X technology which provide superior taste, water quality, consistent filter life and peace of mind when it comes to hygiene.

Supplied: 994051 (5 micron)
On request: 994032 (recommended iX02 limescale filter)

CERTIFICATIONS & COMPLIANCE*
Every Billi drinking water appliance is manufactured under a certified quality control system. All Billi commercial range models have been tested and comply with all required standards including: ISO 9001:2015, QEC 11627; WRAS certified; WELL Cornerstone Member; BREAMM compliant; LEED compliant; Equality Act Compliant; Global Greentag Certified.

** Drawings are for guidance during specification, refer to Installation requirements for final install. All efforts are made to ensure Certifications & Compliance claims are current, however this is subject to change without notice.*

Billi™

Billi UK Limited
University Of Wolverhampton Science Park,
Technology Centre, Glaisher Drive,
Wolverhampton, WV10 9RU

P 020 7456 6789
E marketing@billi-uk.com
W www.billi-uk.com

visit us at

Billi™ is a trademark of Billi Australia Pty Ltd. All rights reserved. © Copyright protected. As Billi Australia Pty Ltd has a policy of continual improvement, all details are subject to change without notice. All goods are sold subject to our published terms and conditions.