# COMMERCIAL DATA SHEET

## Quadra Sparkling Plus 9 XL & Gooseneck

**Billi Quadra Sparkling Plus 9 with XL Levered Dispenser & Gooseneck Mixer**

The Quadra Sparkling Plus 9 is the ultimate choice in modern design and filtered drinking water appliances, delivering instant boiling and chilled filtered water, with the added luxury of sparkling water. Requiring only cold feed mains supply, the Quadra Plus mixes it's own hot water without the need for any additional under-bench space requirements or boosters.

Utilising under counter Water Cooled Technology to enhance capacity and recovery, all three water output options are conveniently provided by operating the position-sensitive levers on our XL Levered dispenser.

BOILING CHILLED SPARKLING

Up to 60

XL Levered Dispenser



Paddle Mixer

PLUS



Quadra Sparkling Under-Bench Unit




## Features

- SPACE SAVING DESIGN
- SAFE TO OPERATE
- ENERGY EFFICIENT
- HEAT EXCHANGE TECHNOLOGY
- NO CUPBOARD VENTILATION REQUIRED
- GREENTAG CERTIFIED
- EASY INSTALLATION
- WATER COOLED TECHNOLOGY

## PRODUCT SPECIFICATIONS

| Water type | Product code | Model name | Dispenser | Suggested no. of people | Boiling water delivery (cups per hour)* | Chilled & Sparkling water delivery (cups per hour) | Power supply (amps) |
|---|---|---|---|---|---|---|---|
| BOILING CHILLED SPARKLING | 906065LGUK | Quadra Sparkling Plus 9 | XL Levered | Up to 60 | 180 | 200 | 2 x13 |

* Based on a set volume of water being drawn every 30 seconds at an inlet temperature of average temperature 21°C. Each cup is equivalent to 170ml. Usage patterns and draw-off methods can impact recovery.

## Accessories

**992803** - 120mm Riser & Font



**990720** - Tubing Extension Kit for X series dual temp dispensers 2mtrs

## Finishes

Standard Finishes

- CH - Chrome
- BR - Brushed
- MB - Matte Black

Special Order Finishes

- MW - Matte White
- RG - Rose Gold
- BRG - Brushed Rose Gold
- GM - Gun Metal Grey
- UB - Urban Brass

Add the relevant Finish Code and the Country Identifier (UK) to the Product code to complete your specification eg 906060LMBUK

# TECHNICAL DRAWING & INSTALLATION REQUIREMENTS

## PRODUCT DIMENSIONS

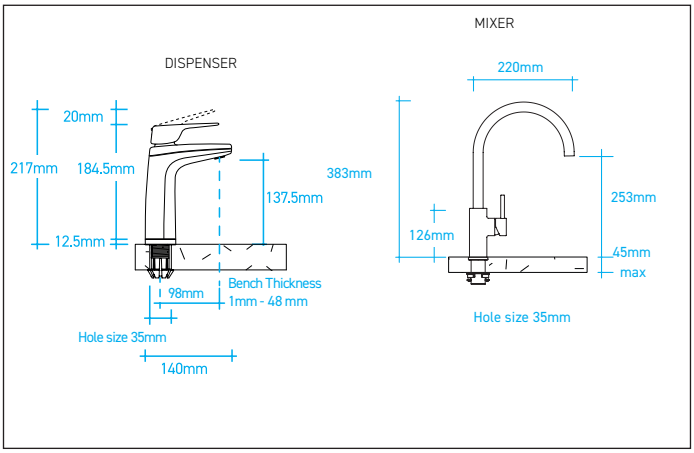


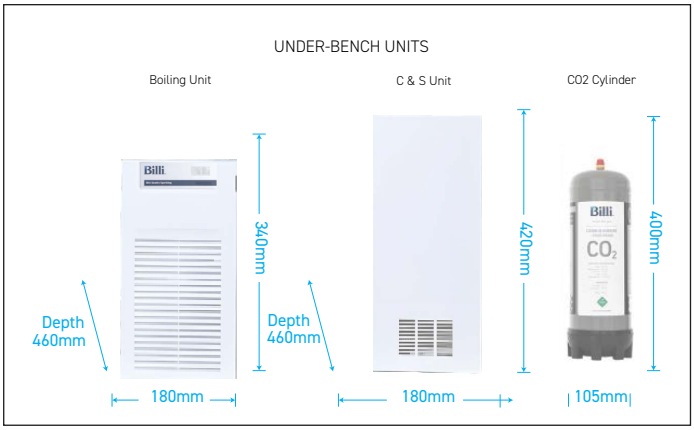


## PREFERRED INSTALLATION LAYOUT

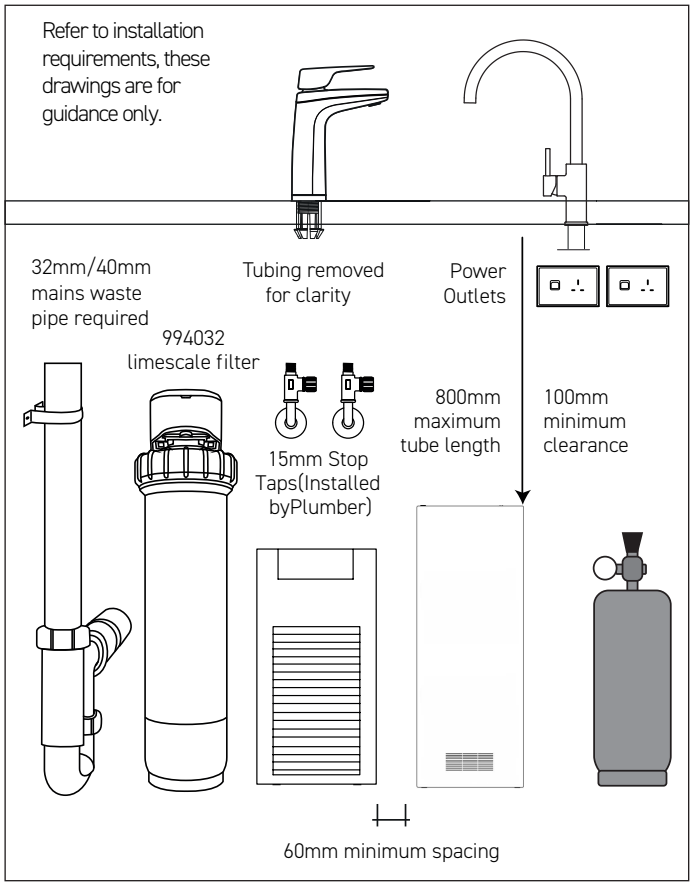


### WATER SUPPLY

An accessible drinking water supply from a 15mm pipe with a minimum pressure of 4 bar static and 10 litres a minute flow should be located in the base unit of the installation location.

### POWER SUPPLY

A 13amp double switched socket must be positioned at a high level and accessible within the cupboard. The units come with a 1 meter flex cord and plug.

### WASTE REQUIREMENTS

A 32mm/40mm mains waste pipe is required within the base unit. This pipe should include a trap or u-bend to prevent any unpleasant odours. If there is a spigot waste connection, two spigots are required to connect to the waste and condenser line.

### FILTRATION

Billi's range of premium filters utilise BWT's unique Fibron X technology which superior taste, water quality, consistent filter life and peace of mind on the topic of hygiene.

Supplied: 994051 (5 micron)
On request: 994032 (recommended iX02 limescale filter)

### $CO_2$ Cyclinder

The $CO_2$ gas cylinder supplied must be secured in a suitable location. Each cylinder contains 1100g of $CO_2$ and should be installed in a well ventilated area. Each cylinder will provide 160 litres of sparkling water depending on the unit settings. The MSDS is available on www.billi-uk.com for a complete list of specifications and warnings. Replacement gas cylinders are available from Billi. $CO_2$ Cylinder - Order code 996911 and select chosen quantity (single, twin, 6-pack).

### WARRANTY

The Billi Quadra Range is covered by a comprehensive 2 year warranty on all parts and labour.

### CERTIFICATIONS & COMPLIANCE*

Every Billi drinking water appliance is manufactured under a certified quality control system. All Billi commercial range models have been tested and comply with all required standards including: WRAS certified; WELL Cornerstone Member; BREAMM compliant; LEED compliant; Equality Act Compliant.

** Drawings are for guidance during specification, refer to Installation requirements for final install. All efforts are made to ensure Certifications & Compliance claims are current, however this is subject to change without notice.*

**Billi UK Limited**
University Of Wolverhampton Science Park,
Technology Centre, Glaisher Drive,
Wolverhampton, WV10 9RU

P 020 7456 6789
E marketing@billi-uk.com
W www.billi-uk.com

visit us at

Billi™ is a trademark of Billi Australia Pty Ltd. All rights reserved. © Copyright protected. As Billi Australia Pty Ltd has a policy of continual improvement, all details are subject to change without notice. All goods are sold subject to our published terms and conditions.