COMMERCIAL DATA SHEET
Sahara 360 XL & Red/Blue Levers

Billi Sahara 360 with XL Levered Dispenser & Red/Blue Levers

The Sahara 360 Boiling and Ambient drinking water system is a high capacity commercial water system, but still maintains Billi's core design principles of space saving while requiring no joinery ventilation.

Offering both boiling temperature water and a bottomless supply of filtered ambient temperature water, the Sahara range is convenient and functional.

Steamlined and elegant, the XL levered dispenser with the addition of our Red/Blue levers offers boiling and chilled output delivered safely by operating the position-sensitive levers. The inclusion of red and blue levers provides accessibility for individuals with vision impairments, and meets contrast criteria to comply with the Equality Act 2010.

BOILING STILL

Up to 60

XL Levered Dispenser & Red/Blue Levers



Sahara Under-Bench Unit



Features

SPACE SAVING DESIGN

SAFE TO OPERATE

SPLASHFREE DELIVERY

ENERGY EFFICIENT

NO CUPBOARD VENTILATION REQUIRED

EQUALITY ACT COMPLIANT

EASY INSTALLATION

PRODUCT SPECIFICATIONS

Water type	Product code	Model name	Dispenser	Suggested no. of people	Boiling water delivery (cups per hour)*	Still water delivery (cups per hour)	Power supply (amps)
BOILING STILL	943060LUK	Sahara 360	XL Levered	Up to 60	Up to 165	unlimited	13

* Based on a set volume of water being drawn every 30 seconds at an inlet temperature of average temperature 21°C. Each cup is equivalent to 170ml. Usage patterns and draw-off methods can impact recovery.

Accessories

992803 - 120mm Riser & Font



996300 - Braille Decals



990720 - Tubing Extension Kit for X series dual temp dispensers 2mtrs

Finishes

Standard Finishes

CH - Chrome

As a fit for purpose solution to comply with the Equality Act 2010, the specification code is 943060LRBUK

TECHNICAL DRAWING & INSTALLATION REQUIREMENTS

PRODUCT DIMENSIONS

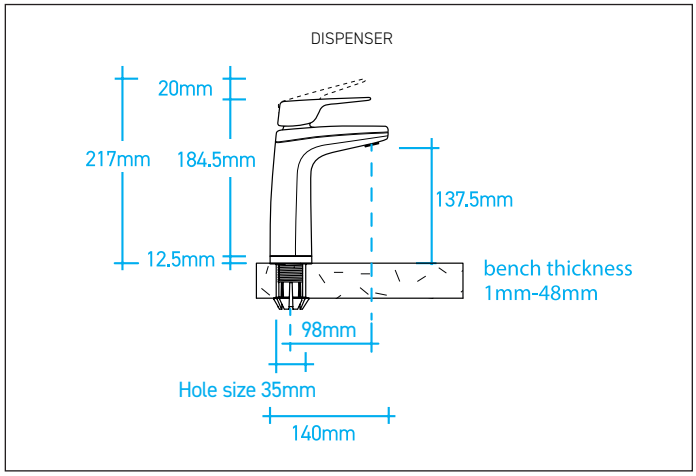

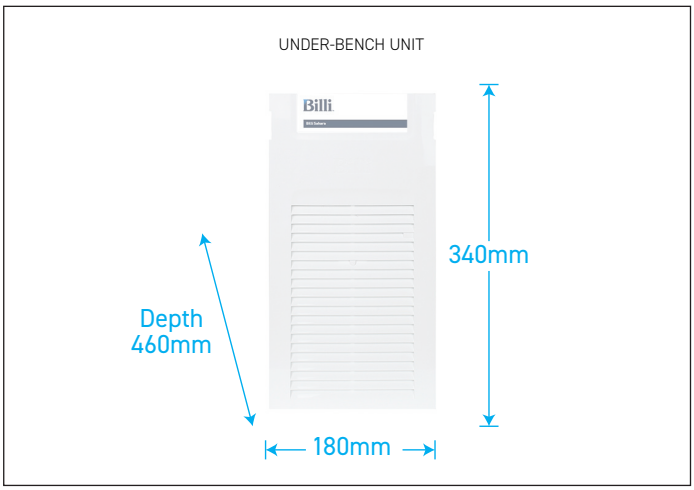

PREFERRED INSTALLATION LAYOUT

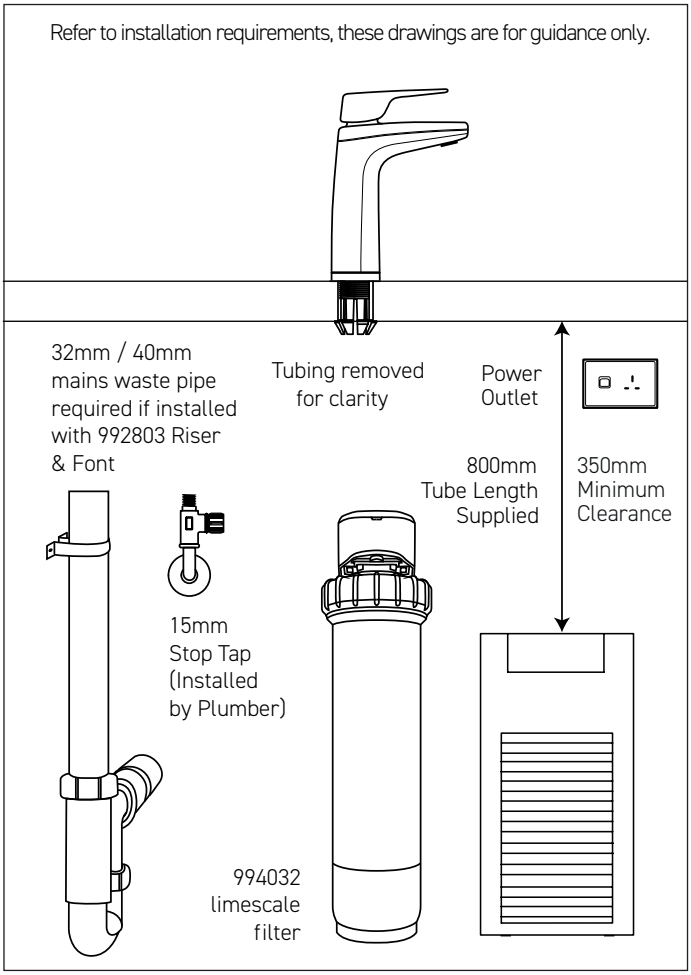

WATER SUPPLY
An accessible drinking water supply from a 15mm pipe with a minimum pressure of 2.5bar static and 6 litres a minute flow should be located in the base unit of installation location.

POWER SUPPLY
A 13amp single switched socket must be positioned at a high level and accessible within the cupboard. The unit comes with a 1 meter flex cord and plug.

WASTE REQUIREMENTS
A 32mm/40mm mains waste pipe is required within the base unit. This pipe should include a trap or u-bend to prevent any unpleasant odours. A suitable spigot waste is also acceptable. Where the tap installed over a sink, waste is not required. When installed on a drainage font - then use the existing waste instructions already on the document

WARRANTY
The Billi Sahara Range is covered by a comprehensive 2 year warranty on all parts and labour.

FILTRATION
Billi's range of premium filters utilise BWT's unique Fibron X technology which provide superior taste, water quality, consistent filter life and peace of mind when it comes to hygiene.

Supplied: 994051 (5 micron)
On request: 994032 (recommended iX02 limescale filter)

CERTIFICATIONS & COMPLIANCE*
Every Billi drinking water appliance is manufactured under a certified quality control system. All Billi commercial range models have been tested and comply with all required standards including: ISO 9001:2015, QEC 11627; WRAS certified; WELL Cornerstone Member; BREAMM compliant; LEED compliant; Equality Act Compliant.

** Drawings are for guidance during specification, refer to Installation requirements for final install. All efforts are made to ensure Certifications & Compliance claims are current, however this is subject to change without notice.*

Billi™

Billi UK Limited
University Of Wolverhampton Science Park,
Technology Centre, Glaisher Drive,
Wolverhampton, WV10 9RU

P 020 7456 6789
E marketing@billi-uk.com
W www.billi-uk.com

visit us at

Billi™ is a trademark of Billi Australia Pty Ltd. All rights reserved. © Copyright protected. As Billi Australia Pty Ltd has a policy of continual improvement, all details are subject to change without notice. All goods are sold subject to our published terms and conditions.