COMMERCIAL DATA SHEET
Alpine 125 XL & Red/Blue Levers

Billi Alpine 125 with XL Levered Dispenser & Red/Blue Levers

Enjoy refreshing chilled or a continuous supply of ambient temperature filtered water.

Billi's Alpine 125 offers a premium filtered drinking water experience to account for all preferences. The XL levered dispenser is streamlined and elegant, offering chilled and ambient output delivered safely by operating the position-sensitive levers.

The inclusion of red and blue levers provides accessibility for individuals with vision impairments, and meets contrast criteria to comply with the Equality Act 2010.

STILL CHILLED

Up to 40

XL Levered Dispenser & Red/Blue Levers



Alpine Under-Bench Unit



Features

- SPACE SAVING DESIGN
- ENERGY EFFICIENT
- NO CUPBOARD VENTILATION REQUIRED
- UNLIMITED FILTERED WATER
- WATER COOLED TECHNOLOGY
- ADJUSTABLE CHILLED TEMPERATURE
- CHOICE OF DISPENSER DESIGNS
- EQUALITY ACT COMPLIANT

PRODUCT SPECIFICATIONS

Water type	Product code	Model name	Dispenser	Suggested no. of people	Chilled water delivery (cups per hour)	Still water delivery (cups per hour)	Power supply (amps)
STILL CHILLED	932125LRBUK	Alpine 125	XL Levered & Red/Blue Levers	Up to 40	120	unlimited	13

* Based on a set volume of water being drawn every 30 seconds at an inlet temperature of average temperature 21°C. Each cup is equivalent to 170ml. Usage patterns and draw-off methods can impact recovery.

Accessories

992803 - 120mm Riser & Font



996300 - Braille Decals



990720 - Tubing Extension Kit for X series dual temp dispensers 2mtrs

Finishes

Standard Finish

CH - Chrome

As a fit for purpose solution to comply with the Equality Act 2010, the specification code is 932125LRBUK

TECHNICAL DRAWING & INSTALLATION REQUIREMENTS

PRODUCT DIMENSIONS

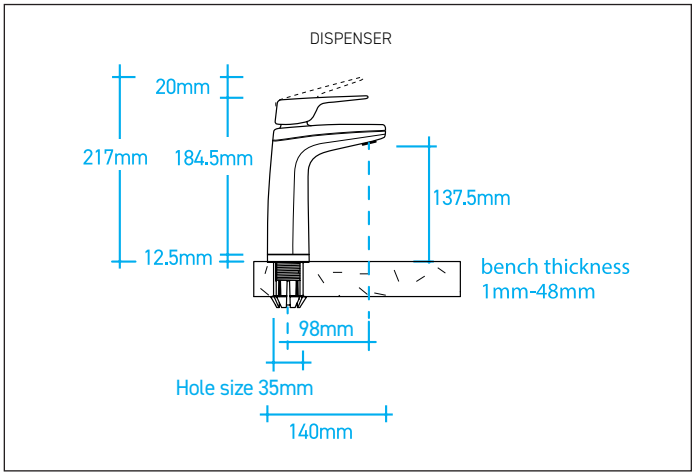

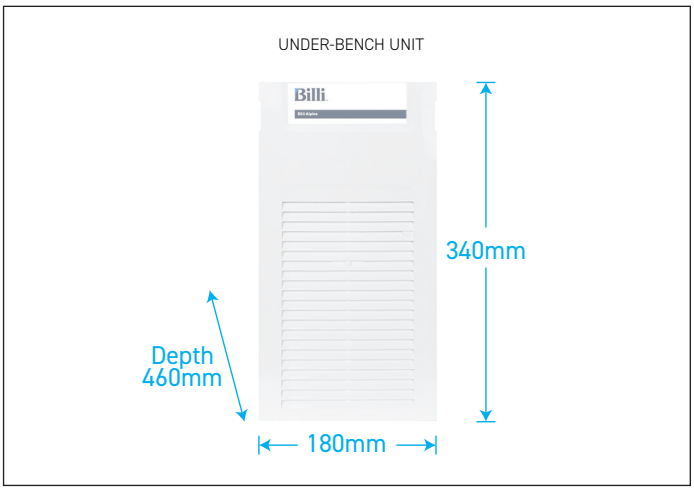

PREFERRED INSTALLATION LAYOUT

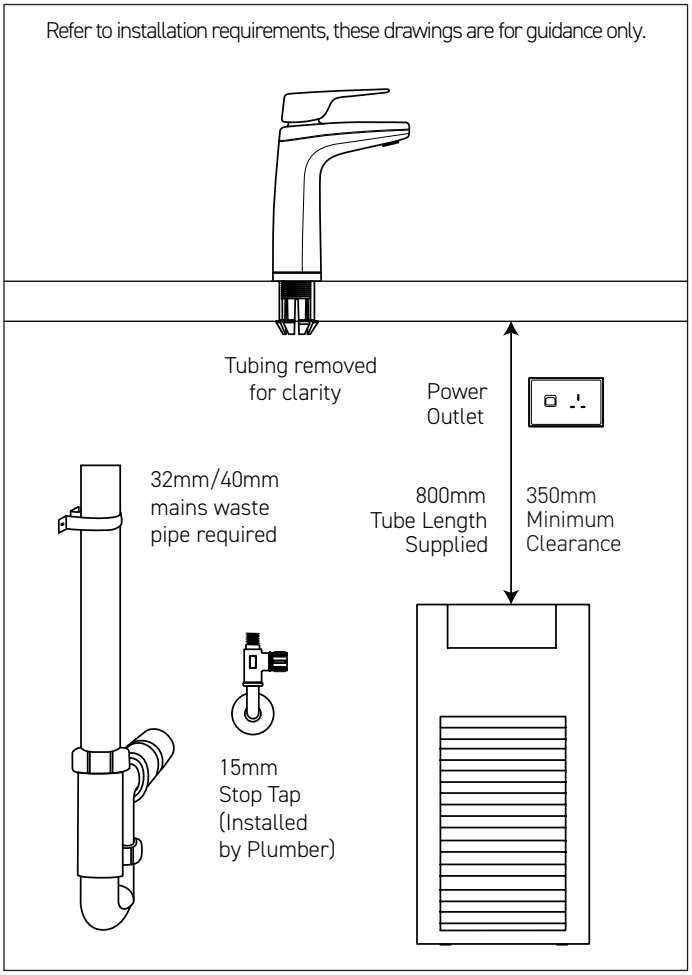

WATER SUPPLY
An accessible drinking water supply from a 15mm pipe with a minimum pressure of 2.5bar static and 6 litres a minute flow should be located in the base unit of the installation location.

POWER SUPPLY
A 13amp single switched socket must be positioned at a high level and accessible within the cupboard. The unit comes with a 1 meter flex cord and plug.

WASTE REQUIREMENTS
A 32mm/40mm mains waste pipe is required within the base unit. This pipe should include a trap or u-bend to prevent any unpleasant odours. If there is a spigot waste connection, two spigots are required to connect to the waste and condenser line.

WARRANTY
The Billi Alpine Range is covered by a comprehensive 2 year warranty on all parts and labour.

FILTRATION
Billi's range of premium filters utilise BWT's unique Fibron X technology which provide superior taste, water quality, consistent filter life and peace of mind on the topic of hygiene.

Supplied: 994051 (5 micron).

CERTIFICATIONS & COMPLIANCE*
Every Billi drinking water appliance is manufactured under a certified quality control system. All Billi commercial range models have been tested and comply with all required standards including: ISO 9001:2015, QEC 11627; WRAS certified; WELL Cornerstone Member; BREAMM compliant; LEED compliant; Equality Act Compliant.

** Drawings are for guidance during specification, refer to Installation requirements for final install. All efforts are made to ensure Certifications & Compliance claims are current, however this is subject to change without notice.*

Billi™

WRAS APPROVED PRODUCT

Certified System Quality ISO 9001

NBS

Billi UK Limited
University Of Wolverhampton Science Park,
Technology Centre, Glaisher Drive,
Wolverhampton, WV10 9RU

P 020 7456 6789
E marketing@billi-uk.com
W www.billi-uk.com

visit us at

Billi™ is a trademark of Billi Australia Pty Ltd. All rights reserved. © Copyright protected. As Billi Australia Pty Ltd has a policy of continual improvement, all details are subject to change without notice. All goods are sold subject to our published terms and conditions.